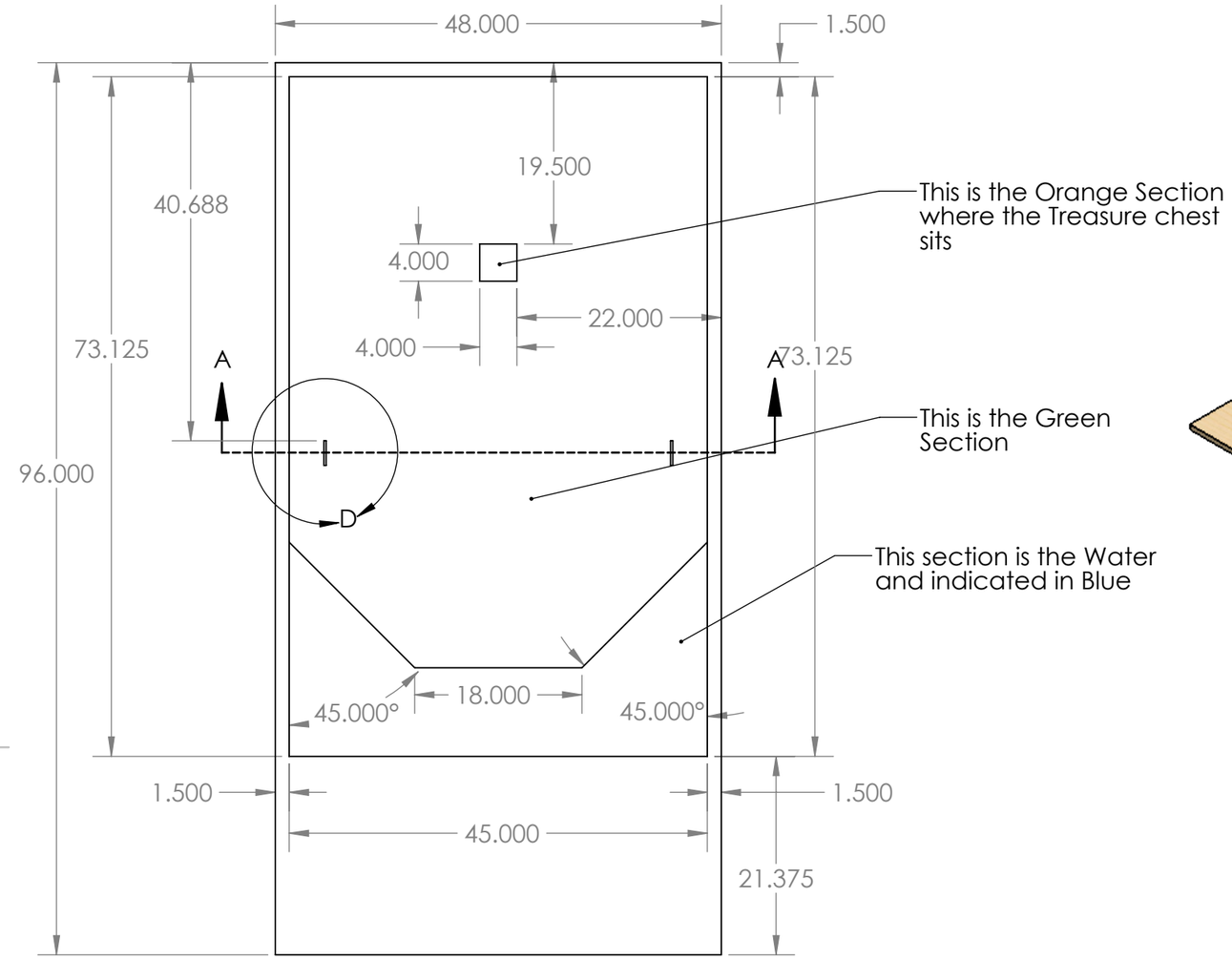

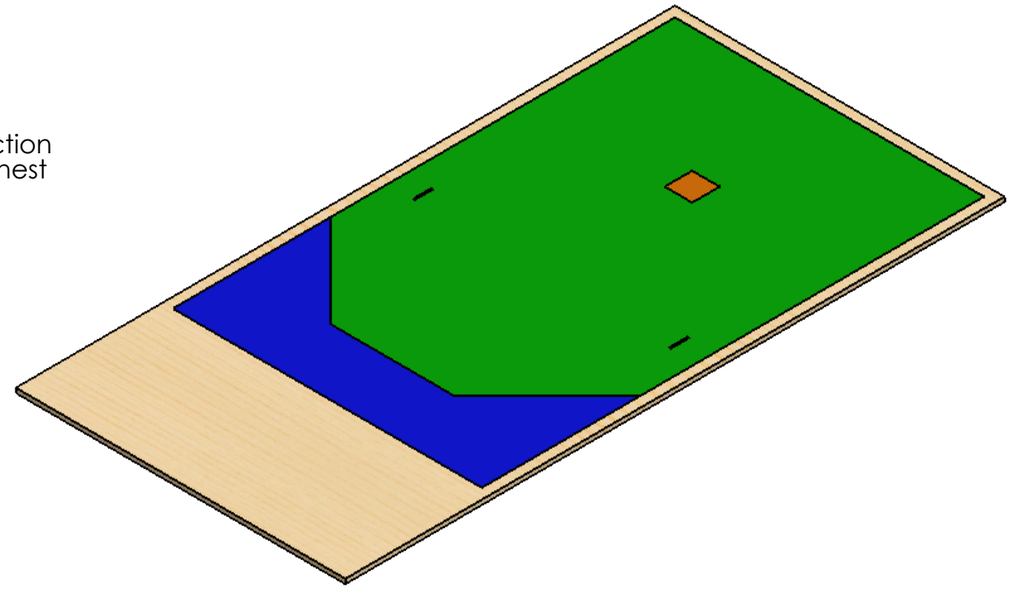

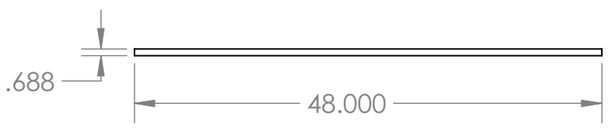

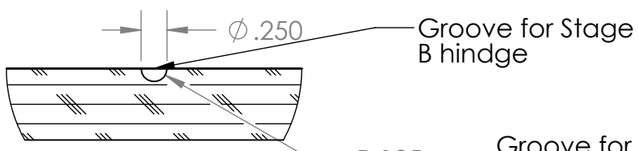

DETAIL C
SCALE 1 : 1.5

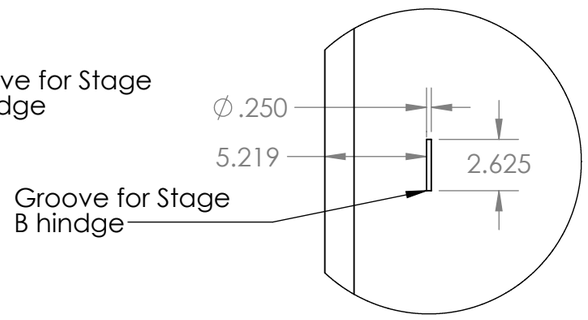

DETAIL D
SCALE 1 : 8

This is Detail C

SECTION A-A

SOLIDWORKS Educational Product. For Instructional Use Only

UNLESS OTHERWISE SPECIFIED: DIMENSIONS ARE IN MILLIMETERS SURFACE FINISH: TOLERANCES: LINEAR: ANGULAR:	FINISH:			DEBURR AND BREAK SHARP EDGES		DO NOT SCALE DRAWING	REVISION
	NAME	SIGNATURE	DATE			TITLE: Plywood Main Board	
DRAWN							
CHK'D							
APPV'D							
MFG							
Q.A				MATERIAL:		DWG NO. Plywood Main Board	A3
				WEIGHT:		SCALE:1:16	SHEET 1 OF 1